ANNUAL REPORT 2006

Meeting date: June 15, 2006

Electromagnetic Control of Fluid Flow in the Mold: Introduction

Kevin Cukierski (M.S. Student) &
Brian G. Thomas

Department of Mechanical & Industrial Engineering
University of Illinois at Urbana-Champaign

The Continuous Casting Mold

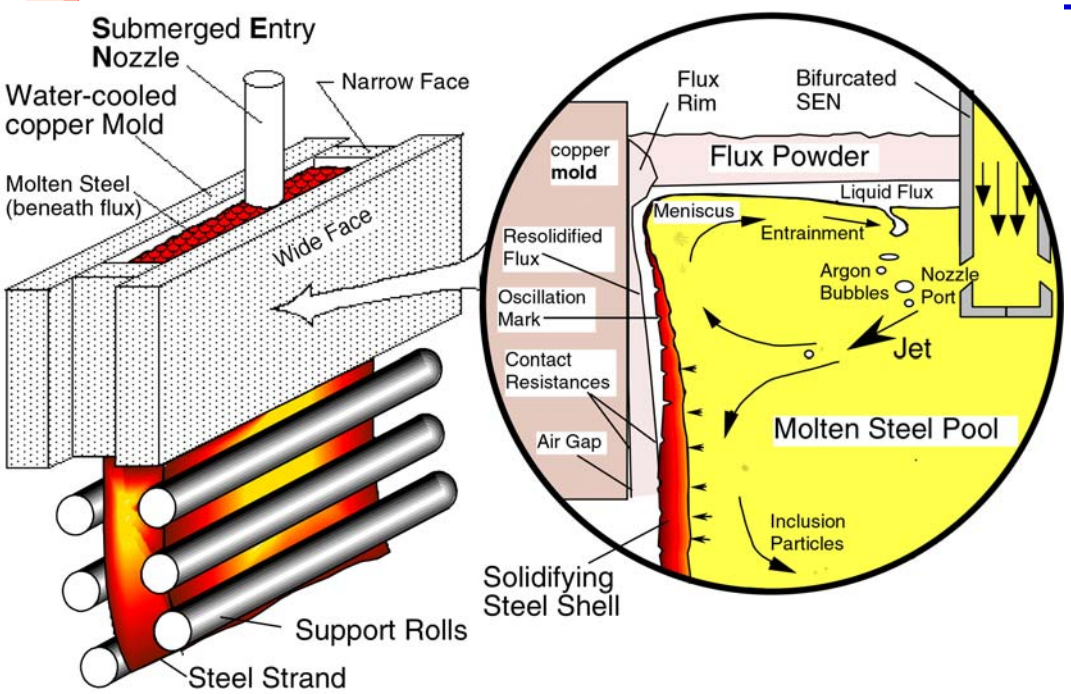

Choosing Fluid Flow Control Parameters to Maximize Product Quality

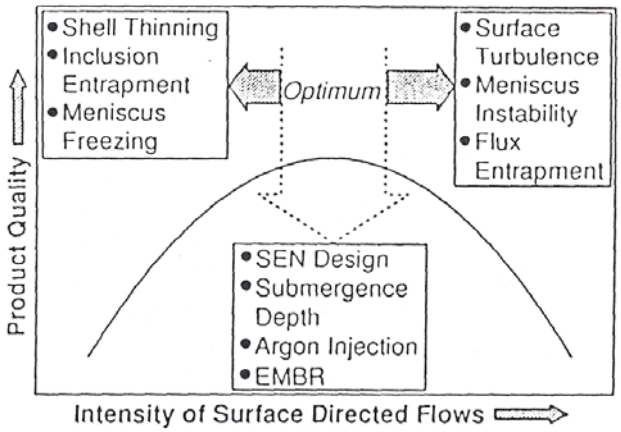

Herbertson et al, 74th Steelmaking Proceedings (Washington, DC), ISS, 1991.

Why Electromagnetics?

- Improve internal microstructure
  - Control superheat
  - Discourage columnar grain formation
  - Help reduce centerline segregation
- Improve control of fluid flow in the mold
  - Stabilize meniscus velocity (0.2-0.4m/s)
  - Maintain a uniform mold level
  - Reduce fluctuations in the meniscus profile
  - Reduce particle capture (bubbles, powder)

Two Types of Electromagnetic Flow Control

- ElectroMagnetic Stirring (EMS)
  - Creates a magnetic field that circulates flow using a moving AC current
- ElectroMagnetic Braking (EMBr)
  - Utilizes a DC current to create a static magnetic field that brakes flow

Mold Flow Control - Stirring

- Three main technologies available
  - Slab Mold Electromagnetic Stirring
  - Flow Control (FC) Mold Electromagnetic Stirring
  - Multi Mode (MM) Electromagnetic Stirring

Slab Mold EMS

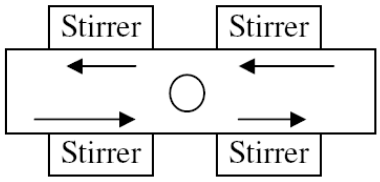

Top view of meniscus (A-A)

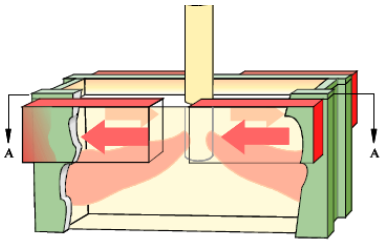

- Utilizes two stirrers close to the meniscus on each wide side of the mold to create a circulating flow
- Helps homogenize meniscus temperature

Hackl et al, ABB Automation Technologies AB, 2006

Manufactured by Nippon

FC Mold EMS

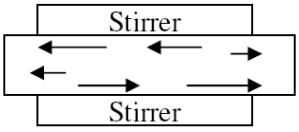

Top view 250-350 mm below meniscus

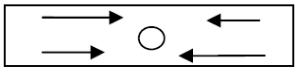

Top view at meniscus (A-A)

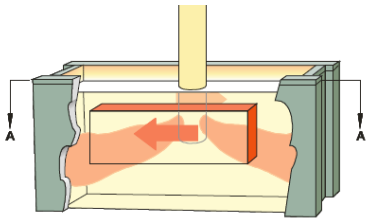

- Utilizes one stirrer about 300mm beneath the meniscus on each wide side of the mold to accelerate flow towards the narrow faces
- Allows for control of the meniscus flow velocity
- Recommended for medium and low speed casters

Hackl et al, ABB Automation Technologies AB, 2006

Manufactured by ABB

Multi-Mode EMS

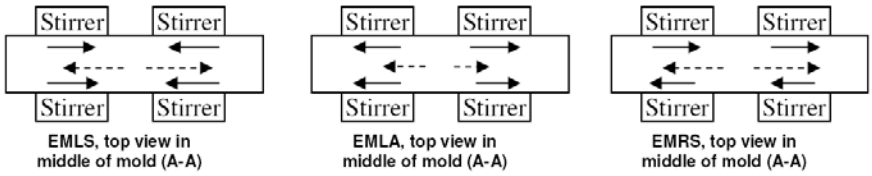

•Slows flow •Accelerates flow •Circulates flow

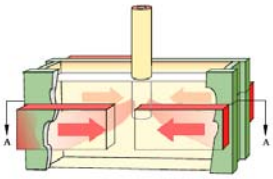

•Utilizes two stirrers on each wide side beneath the meniscus

•Choose between three different modes, as shown above

Hackl et al, ABB Automation Technologies AB, 2006

Manufactured by JFE

Mold Flow Control - Braking

- Three main technologies available
  - Local Field EMBr
  - Ruler EMBr
  - Flow Control (FC) Mold

Local Field EMBr

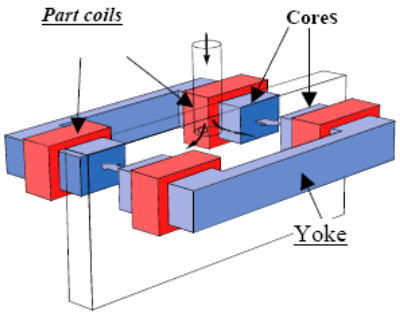

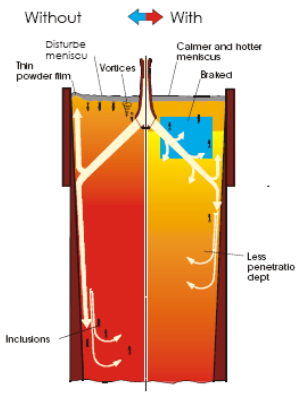

- Two "rectangles" of magnetic field are placed on either side of the SEN
- Used in thin-slab casting or where size/weight is an issue

Trippelsdorf et al, International Scientific Colloquium, Modeling for Material Processing, Hanover, 2003

Manufactured by ABB

Ruler EMBr

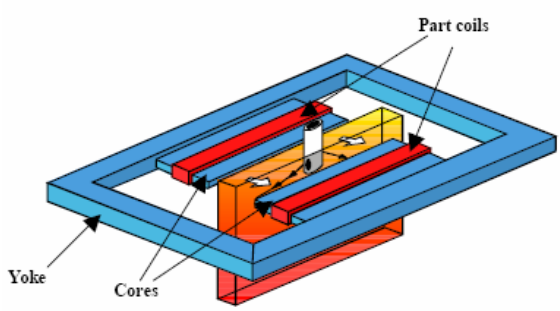

Without EMBr

With EMBr

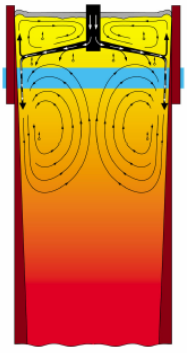

- A single magnetic field is placed across the width of the mold just below the SEN
- Used for thin-slab casters

Trippelsdorf et al, International Scientific Colloquium, Modeling for Material Processing, Hanover, 2003

Manufactured by ABB

FC Mold

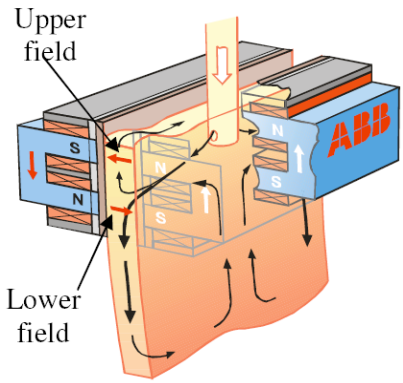

Without FC Mold With FC Mold

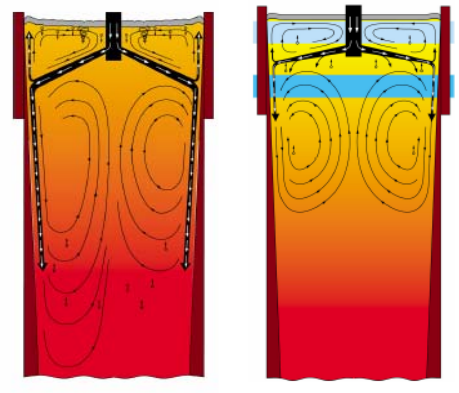

•Uses dual magnetic fields across the width of the mold located at the meniscus and below the SEN

•Used for medium to high-speed casting

Hackl et al, ABB Automation Technologies AB, 2006

Manufactured by ABB

Control – 3 Types

1) Use a prescribed field
   - Most ineffective control method, as changing conditions are not taken into consideration

2) Use casting conditions to determine field
   - Most common control method
   - For example, the MM-EMS utilizes an online computer that chooses the correct mode of operation and field intensity based on casting conditions

Control – 3 Types

3) Use a closed-loop feedback control system

- Desired type of control
- ABB has developed EM Control for its FC Mold
  - Used to keep meniscus velocity as constant as possible
  - Predicts meniscus velocity by using the difference in height at two points on the meniscus

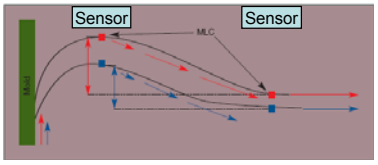

Height difference implies meniscus velocity

  - Velocity and casting conditions are compared to a database of simulation results
  - Changes in field strength are implemented if needed

Kollberg et al, Stahl and Eisen, 6/2005

Evaluation of FC Mold and EM Control

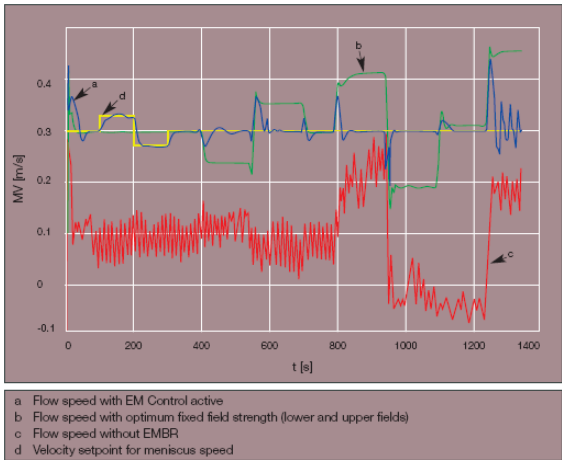

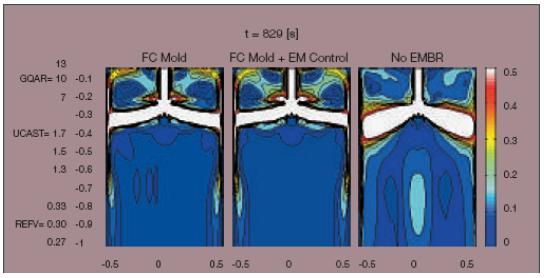

•FC Mold reduces fluctuations in meniscus velocity

•EM Control improves upon velocity stabilization obtained with FC Mold

•FC Mold decreases SEN jet angles and increases meniscus velocities

•EM Control attempts to create mold flow symmetry

Kollberg et al, Stahl and Eisen, 6/2005

CCC Contributions

- Directly measuring the meniscus velocity with a sensor is the next step toward advancing control technology
  - CCC is currently researching
- This research will focus on experimental validation of casting simulations using electromagnetics in the mold
  - A magnetic field will be calculated using ANSYS and imported into the FLUENT MagnetoHydroDynamics (MHD) module, which incorporates electromagnetic effects into the flow simulation

MHD Theory

- When a conducting fluid of known velocity $\vec{U}[m/s]$ flows through an applied magnetic field of known strength $\vec{B}_o[T]$ an electric current density $\vec{j}[A/m^2]$ is induced. This current density causes a Lorentz force $\vec{F}[N/m^3]$ which acts upon the fluid.

$$\nabla^2\varphi = \nabla \bullet (\vec{U} \times \vec{B}_o) \quad (1)$$

$$\vec{j} = \sigma(-\nabla\varphi + (\vec{U} \times \vec{B}_o)) \quad (2)$$

$$\vec{F} = \vec{j} \times \vec{B}_o \quad (3)$$

- Equation (1) is the electric potential equation, and is solved for φ using appropriate boundary conditions. Since $\vec{U}$, $\vec{B}_o$, φ and electrical conductivity σ are known, $\vec{j}$ can be calculated using Ohm's Law (Equation (2)). Finally, Lorentz force is calculated using Equation (3).

Analytical Example - EMBr

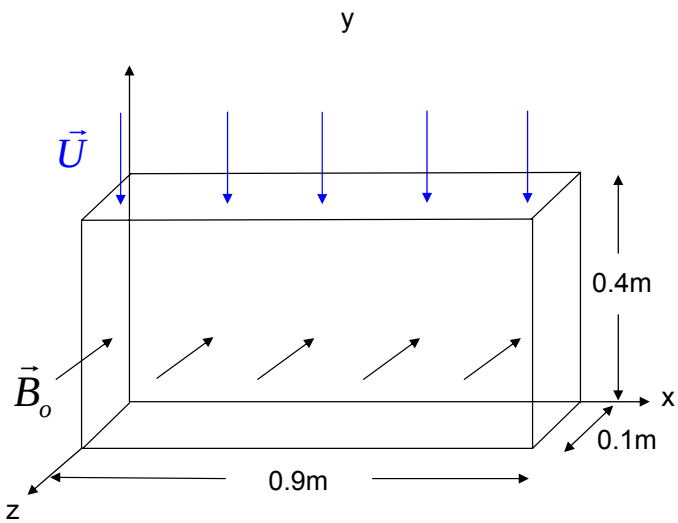

- A constant magnetic field $\vec{B}_o$ is applied to a rectangular domain with uniform velocity $\vec{U}$. This is the type of field an EMBr would employ.
- The walls are considered to be zero-shear, conducting boundaries
- Steady-state is assumed

$\vec{U}$ = -0.4m/s $\hat{j}$ $\vec{B}_o$= -0.2T $\hat{k}$

$$\vec{F} = 1.14 \frac{kN}{m^3} \hat{j}$$

Practical Example – LWB Nozzle

Nozzle Height = 740mm

Bore = 74mm

Port Angle = 0°

Port Height = 95mm

Port Width = 57mm

•Solved in FLUENT using the standard k-ε model for 3-D turbulent fluid flow

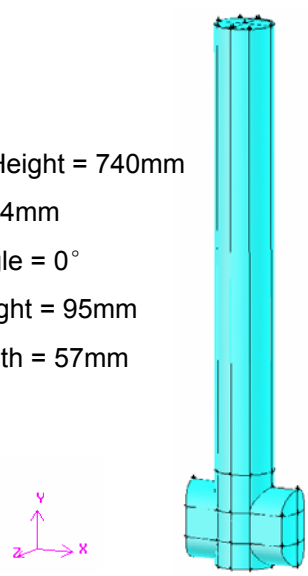

Nozzle Fluid Domain

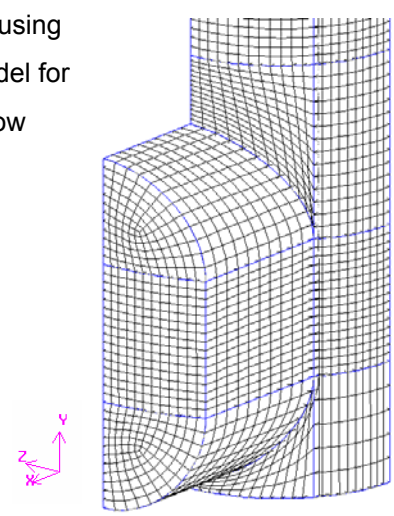

•Two-fold symmetry allowed for one-quarter of the domain to be meshed, which shortened computing time

¼ Mold Simulation

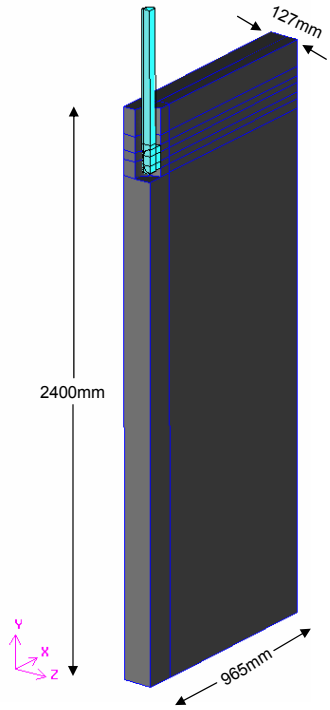

- Casting speed given as 1.1m/min
- Submergence depth given as 151mm
- This mold was used for each simulated nozzle

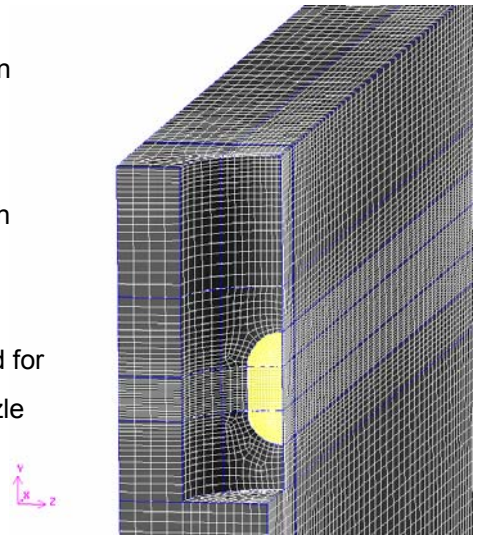

- Yellow zone represents inlet to the mold

Original Nozzle Results

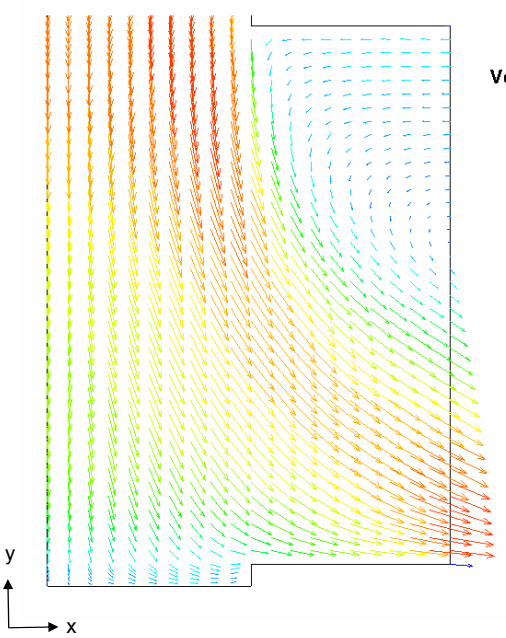

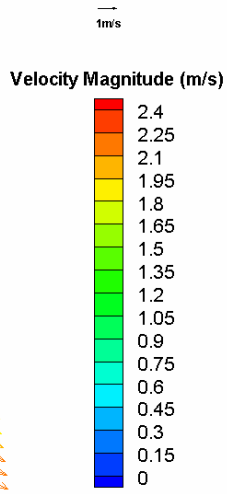

Jet Characteristics

V_x	1.66 m/s
V_y	-0.43 m/s
V_z	-0.05 m/s
Jet Speed	1.72 m/s
Theta yx	-14.64 °
Theta zx	-1.55 °
Back-flow Zone Fraction	0.315

Note: Velocities are averages

Original Nozzle Mold Results

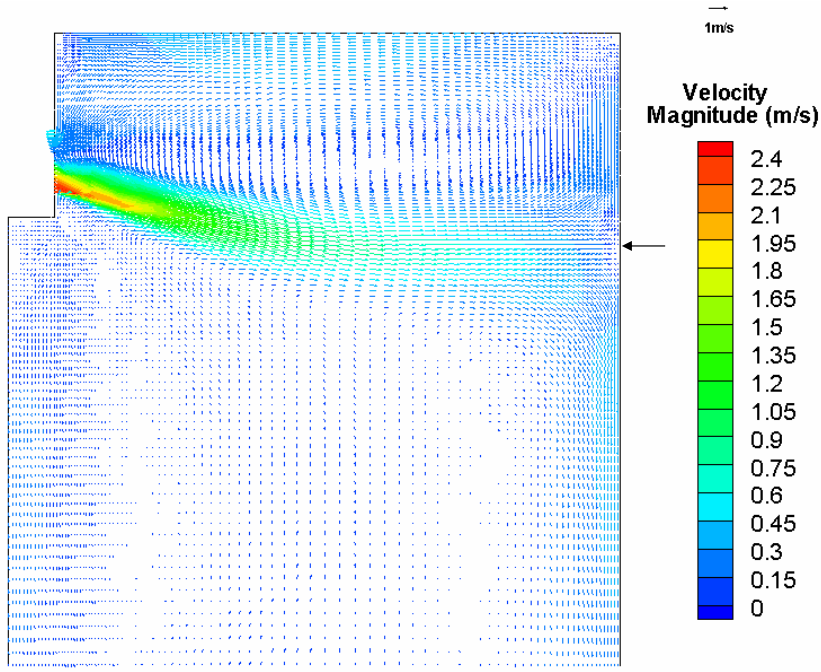

Original Nozzle Mold Meniscus Velocity

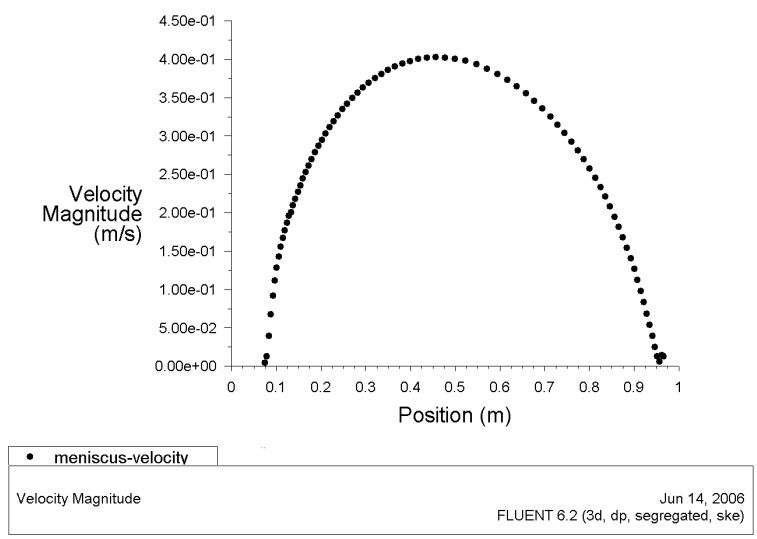

$|V|_{max}$ = 0.41m/s

Redesign 1

Nozzle Height = 740mm

Bore = 74mm

Port Angle = 8° up, 25° down

Port Height = 77mm

Port Width = 57mm

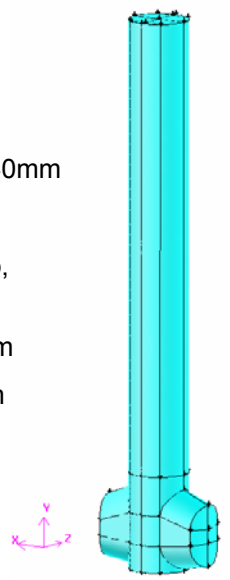

Nozzle Fluid Domain

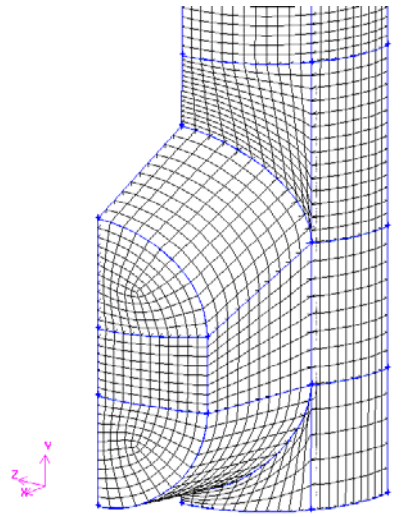

•Nozzle outlet pinched to reduce the backflow zone fraction

Redesign 1 Nozzle Results

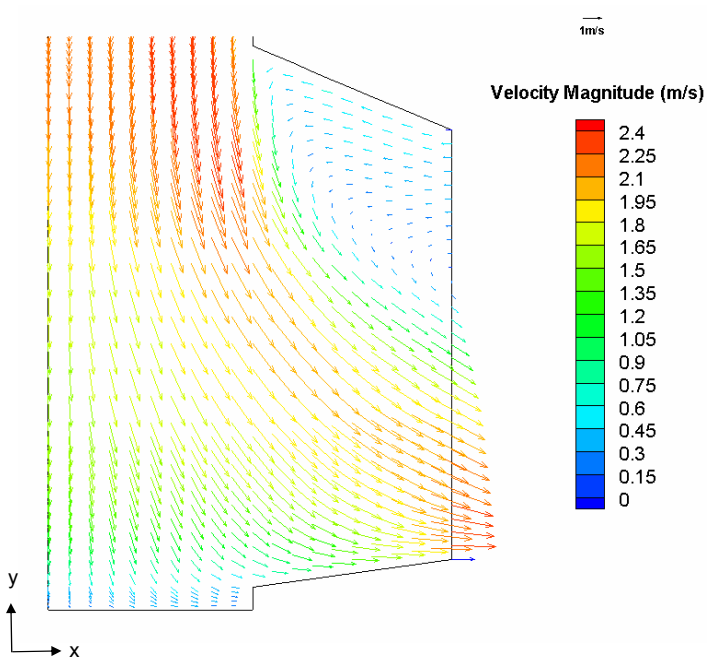

Jet Characteristics

V_x	1.67 m/s
V_y	-0.32 m/s
V_z	-0.06 m/s
Jet Speed	1.70 m/s
Theta yx	-10.70°
Theta zx	-2.06°
Back-flow Zone Fraction	0.20

Note: Velocities are averages

Redesign 1 Mold Results

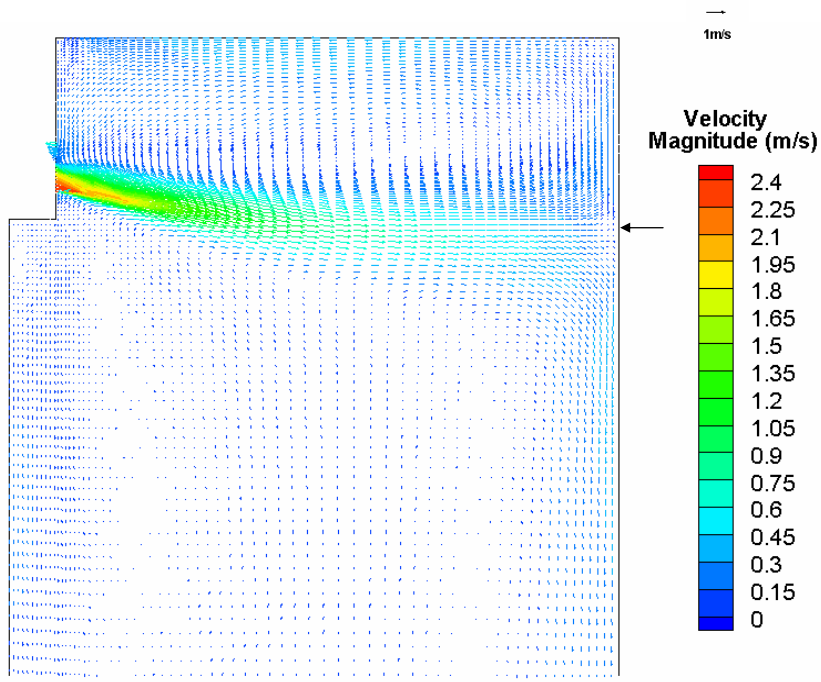

Redesign 1 Mold Meniscus Velocity

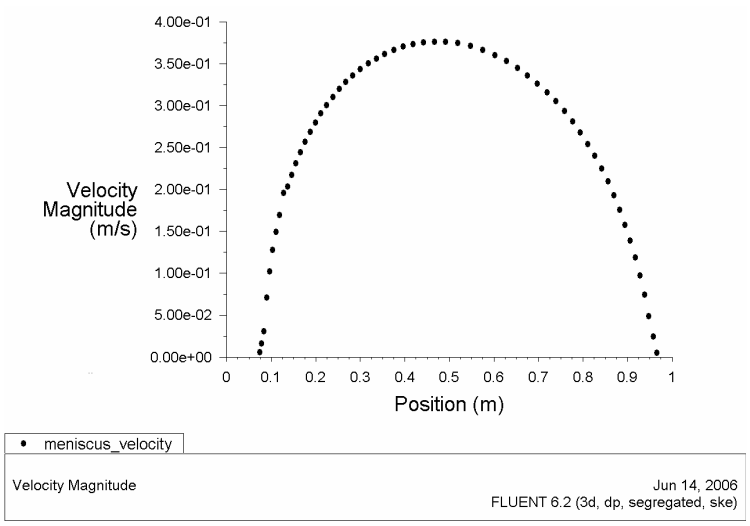

$|V|_{max}$ = 0.375m/s

Redesign 2

Nozzle Height = 740mm

Bore = 74mm

Port Angle = 30°

Port Height = 95mm

Port Width = 57mm

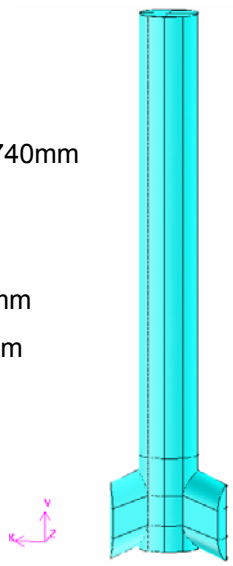

Nozzle Fluid Domain

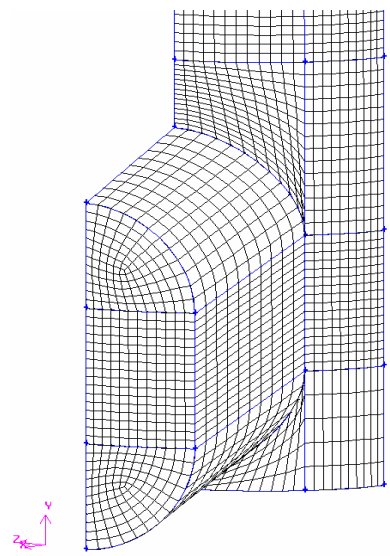

•Nozzle jet angled 30º downward in an attempt to decrease meniscus velocity

Redesign 2 Nozzle Results

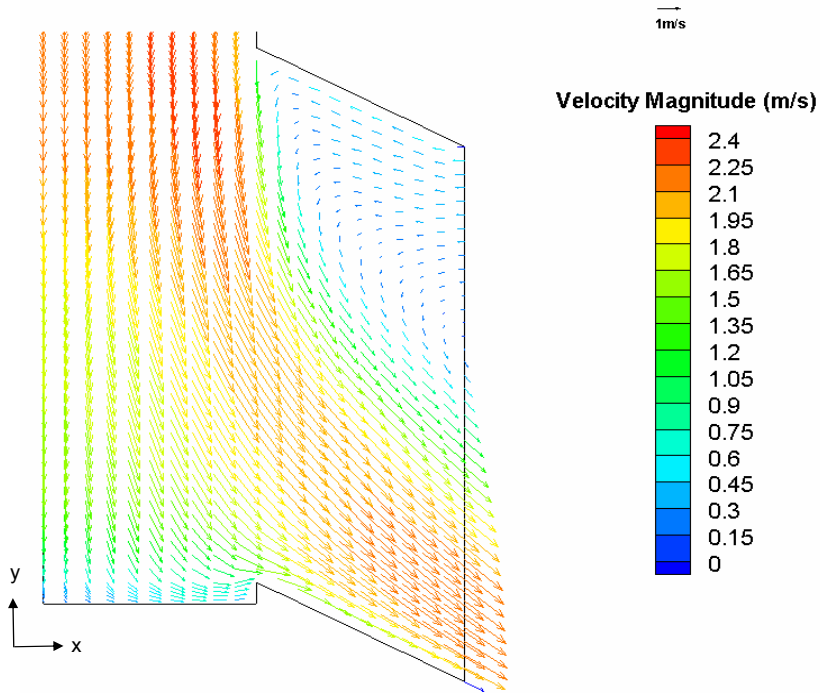

Jet Characteristics

V_x	1.41 m/s
V_y	-0.86 m/s
V_z	-0.04 m/s
Jet Speed	1.66 m/s
Theta yx	-31.42°
Theta zx	-1.77°
Back-flow Zone Fraction	0.257

Note: Velocities are averages

Redesign 2 Mold Results

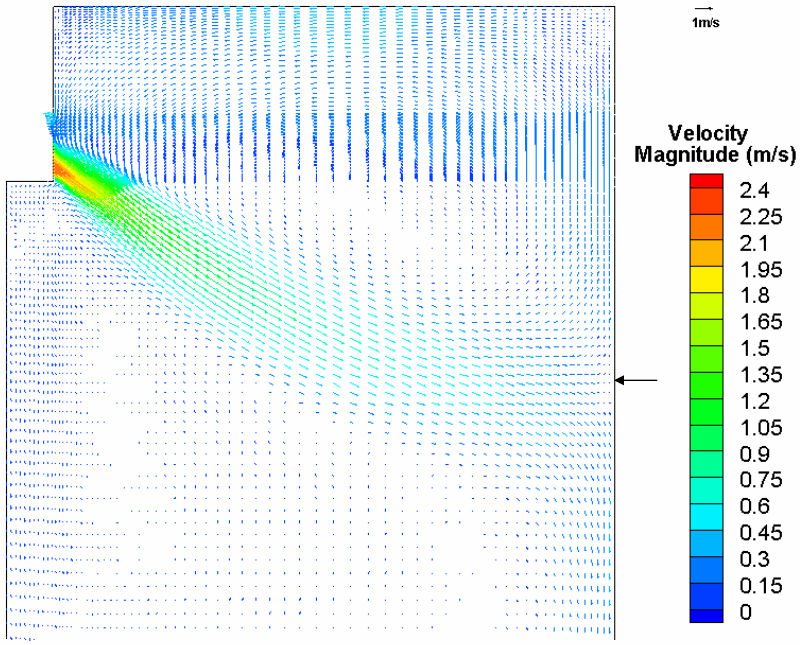

Redesign 2 Mold Meniscus Velocity

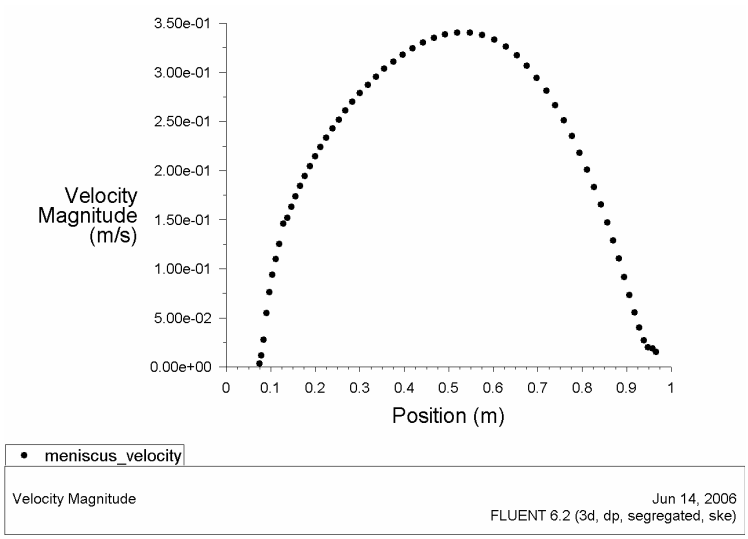

$|V|_{max}$ = 0.35m/s

Meniscus Velocity Comparison

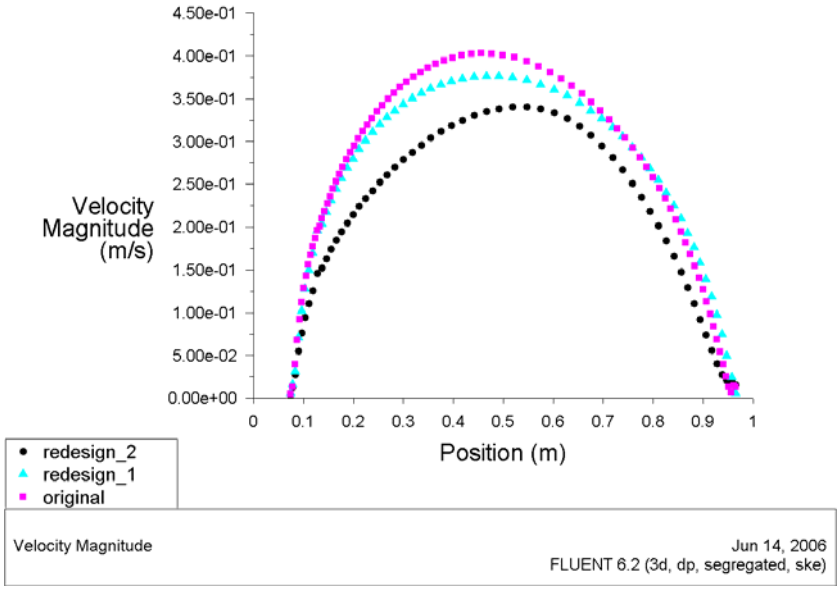

Adding Ruler EMBr to Original Nozzle Mold

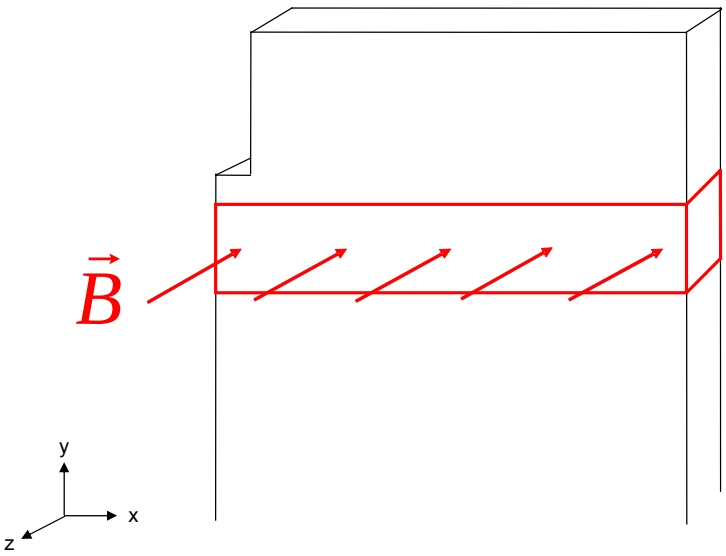

- The goal is to vary the meniscus velocity by using an electromagnetic brake as opposed to redesigning the nozzle
- A static DC field is applied to a band of fluid below the SEN

Results

- We were unable to obtain run the simulation in FLUENT
- We are currently working with FLUENT developers to mend the issue, and expect to find a solution in the near future

Summary

- There are two types of electromagnetic flow control that improve internal microstructure and control of fluid flow in the mold
  - Electromagnetic Stirring
    - Slab Mold EMS
    - FC Mold EMS
    - Multi-Mode EMS
  - Electromagnetic Braking
    - Local EMBr
    - Ruler EMBr
    - FC Mold

Summary

- There are three ways to control electromagnetics
  - Prescribed field
  - Use casting conditions to determine field
  - Closed-loop feedback control
    - EM Control
- Magnetohydrodynamics
  - Theory and governing equations
  - Analytical example
  - “Real-world” example